What Happened to Zelda After She Swallowed Two Nickels, Three Dimes, and a Quarter?

Give the SURFACE AREA of each prism. Find your answer in the answer columns and notice the two letters next to it. Write these letters in the spaces over the exercise number at the bottom of the page.

1

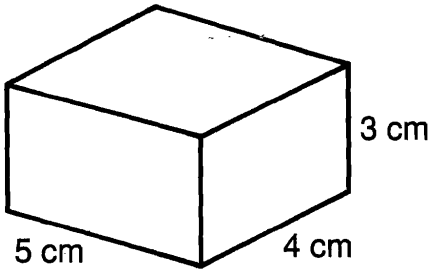

2

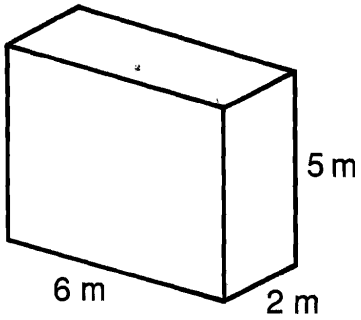

3

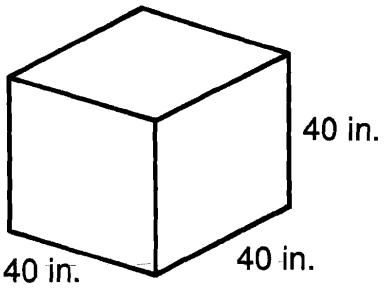

4

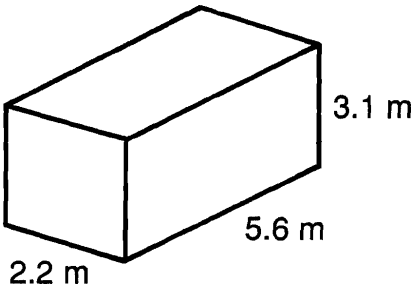

5

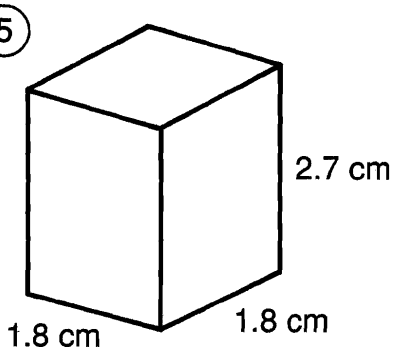

6

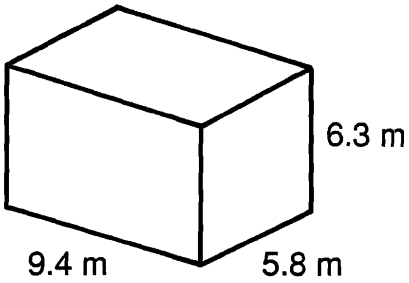

7 A rectangular storage box is 12 in. wide, 15 in. long, and 9 in. high. How many square inches of colored paper are needed to cover the surface of the box?

8 A teacher made a pair of foam dice to use in math games. Each cube measured 10 in. on a side. How many square inches of fabric were needed to cover the two cubes?

Answers

TH 73 m^2			OB 8,560 $in.^2$
AL 23.12 cm^2	AS 94 cm^2	ER 318.26 m^2	NO 25.92 cm^2
EW 846 $in.^2$	IT 86 m^2	AN 9,600 $in.^2$	PL 1,050 $in.^2$
ER 104 m^2	CH 1,200 $in.^2$	GE 300.56 m^2	TR 85 cm^2

4	2	7	1	5	8	3	6

© Creative Publications